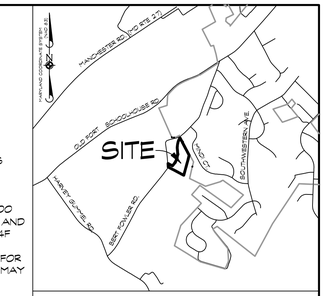

VICINITY MAP Scale: 1"=2000'

GENERAL NOTES:

1. CURRENT TITLE REFERENCE:
   BERT FOWLER ROAD
   DEED REFERENCE: LIBER 11756, FOLIO 236
   APRIL 30, 2026
   GRANTOR: GENE M. WENTZ
2. THE OUTLINE SHOWN HEREON IS BASED ON A BOUNDARY SURVEY BY CLSI, DATED JULY, 2026.
3. THE NEAREST POTABLE WATER SUPPLY AND FIRE PROTECTION IS IN THE TOWN OF MANCHESTER ALONG BERT FOWLER ROAD.
4. M.B.L. DENOTES MINIMUM BUILDING LINE
5. THERE ARE NO WELLS OR SEPTIC SYSTEMS WITHIN 100' OF THE PROPERTY UNLESS SHOWN HEREON.
6. IF GRAVITY FLOW TO SEWAGE DISPOSAL AREA CANNOT BE ENSURED, A PUMPED SEWAGE DISPOSAL SYSTEM WILL BE REQUIRED.
7. FOR CONSTRUCTION OF DWELLINGS EXCEEDING A FOUR BEDROOM HOUSE SIZE (600 GPD), IT MUST BE DEMONSTRATED THAT THERE IS ADEQUATE AREA FOR AN INITIAL AND TWO REPLACEMENT SEPTIC SYSTEMS IN ACCORDANCE WITH COMAR 26.04.02.04F (EFFECTIVE 11/18/85).
8. A PERCOLATION TEST IS ONLY ONE OF THE CRITERIA USED IN CONSIDERING A LOT FOR INSTALLATION OF A SEPTIC SYSTEM. ADDITIONAL TESTING CAN BE REQUIRED AND MAY BE SUBJECT TO SCHEDULING DURING THE WET WEATHER PERIOD. THE ENTIRE LOT IS EVALUATED WHEN APPLICATION FOR A SEPTIC PERMIT IS MADE. ADJOINING PROPERTY HISTORY, PERCOLATION TEST METHODOLOGY, ADJOINING WELLS AND SEPTIC SYSTEMS, PROPOSED NUMBER OF BEDROOMS, HISTORY OF FAILING SEPTIC SYSTEMS AND WELLS, DESIGN, SOIL AND GEOLOGICAL CONDITIONS, AND TOPOGRAPHY IN THE IMMEDIATE AREA ARE THEN USED TO DETERMINE IF THE LOT IS SUITABLE FOR THE UNDERGROUND DISPOSAL OF SEWAGE. ISSUANCE OF A SEPTIC SYSTEM PERMIT CONSTITUTES LOT APPROVAL BY THE HEALTH DEPARTMENT.
9. PARCEL 'A' FOR STORMWATER MANAGEMENT IS TO BE CONVEYED TO THE COMMISSIONERS OF CARROLL COUNTY BY DEED TO BE RECORDED SIMULTANEOUSLY WITH THE APPROVED RECORD PLAT.
10. ZONING: R-40,000 (RESIDENTIAL)
11. MINIMUM BUILDING SETBACK REQUIREMENTS
    FRONT YARD: 40'
    SIDE YARD: 20'
    REAR YARD: 50'
12. LOTS 1 THRU 4 SHALL UTILIZE THE USE-IN-COMMON DRIVEWAY AS SHOWN HEREON. A DECLARATION OF MAINTENANCE OBLIGATION SETTING FORTH THE RESPONSIBILITIES FOR MAINTENANCE OF THE USE-IN-COMMON DRIVEWAY IS INTENDED TO BE RECORDED SIMULTANEOUSLY WITH THE APPROVED RECORD PLAT.
13. LOTS 1 THRU 4 CONTAIN PRIVATE STORMWATER MANAGEMENT FACILITIES. A STORMWATER MANAGEMENT EASEMENT AND MAINTENANCE AGREEMENT SHALL BE GRANTED TO THE COUNTY COMMISSIONERS OF CARROLL COUNTY AS AN EASEMENT OF ACCESS TO THE COUNTY COMMISSIONERS OR AUTHORIZED REPRESENTATIVES BY A DEED TO BE RECORDED SIMULTANEOUSLY WITH APPROVED RECORD PLAT.
14. THE PROPOSED PROJECT IS LOCATED WITHIN A TIER II WATERSHED WITH NO ASSIMILATIVE CAPACITY REMAINING AS DESIGNATED BY THE MARYLAND DEPARTMENT OF THE ENVIRONMENT. NO TIER II WATERS ARE LOCATED ONSITE.
15. THE FOREST CONSERVATION REFORESTATION REQUIREMENT WILL BE MET BY PURCHASE OF FOREST BANK CREDITS.
16. THE AREA SHOWN HEREON AS FOREST CONSERVATION EASEMENT, WITH A TOTAL ACREAGE OF 1.17 AC. ±, SHALL BE GRANTED TO THE CARROLL COUNTY COMMISSIONERS BY A DEED.

LEGEND

- SOIL TYPE
- GbB (B) / HsA (B-D) — SOIL LINE / HYDROLOGIC SOIL GROUP
- EXISTING TREE LINE
- PROPERTY BOUNDARY
- EXISTING PAVING
- ADJOINER LINE
- EXISTING 10' CONTOUR LINE
- EXISTING 2' CONTOUR LINE
- PROPOSED 2' CONTOUR LINE
- PROPOSED 10' CONTOUR LINE
- PROPOSED WELL
- APPROVED PERC TEST
- FAILED PERC TEST
- PROPOSED TREE LINE

DATA TABULATIONS

0100. CONCEPT PLAN
0600. CONCEPT SEDIMENT CONTROL PLAN
0700. CONCEPT SEDIMENT CONTROL NOTES AND DETAILS
0800. CONCEPT GRADING PLAN
0900. CONCEPT STORMWATER MANAGEMENT PLAN
1000. CONCEPT STORMWATER MANAGEMENT DETAILS
1400. CONCEPT FOREST STAND DELINEATION
1401. CONCEPT FOREST CONSERVATION PLAN

SUBDIVISION/SITE **Bert Fowler Property**

Test #	Test Type	Percolation Rate	Percolation Rate	Comments	Date	Test #	San.
1	TZ			>2 min at 12ft	05/12/26	1	NPD
2	DT	24 min. at 5 ft.	4 min. at 8 ft.	>2 min at 12ft	05/12/26	2	NPD
3	DT	30 min. at 5 ft.	8 min. at 8 ft.	>2 min at 12ft	05/12/26	3	NPD
4	TF	>30 min. at 3 ft.	3 min. at 4 ft.	>2 min at 8ft	05/12/26	4	NPD
5	DT	2 min. at 2 ft.	18 min. at 4 ft.	>2 min at 8ft	05/12/26	5	NPD
6	DT	2 min. at 5 ft.	6 min. at 7 ft.	>2min at 11ft	05/12/26	6	NPD
7	MTF	15 min. at 4 ft.		>2 min at 8ft	05/12/26	7	NPD
8	MTF	29 min. at 4 ft.		>2 min at 8ft	05/12/26	8	NPD
9	MTF	5 min. at 4 ft.		>2 min at 8ft	05/12/26	9	NPD
10	TF	2 min. at 2 ft.		>2min at 6ft	05/12/26	10	NPD
11	TF	12 min. at 2 ft.		>2min at 6ft	05/12/26	11	NPD
12	TF	4 min. at 2 ft.		>2min at 7ft	05/12/26	12	NPD
13	TZ			>2min at 11ft	05/12/26	13	NPD
14	MTF	>30 min. at 4 ft.		>2min at 8ft	05/12/26	14	NPD

SHEET INDEX

1. ZONING DISTRICT: R-40,000
2. SOIL CLASSIFICATION: NRCS SOIL DATA
3. NUMBER OF LOTS PROPOSED: 4
4. TOTAL AREA OF LOTS: 5.67 AC.
5. AREA OF DEDICATION PARCEL 'A': 0.05 AC
6. AREA OF SWM PARCEL 'B' : 0.47 AC.
7. TOTAL AREA OF PLAN: 6.19 AC.
8. DWELLING UNITS BY TYPE: SINGLE-FAMILY: 4

OWNER/DEVELOPER

BENJAMIN A MYERS LAND
INVESTOR LLC
160 RAM DRIVE
HANOVER, PA 17331

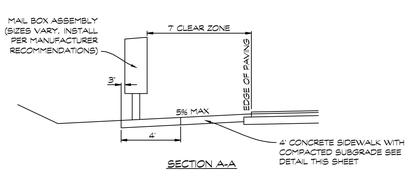

SECTION A-A

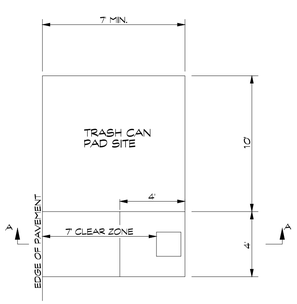

PLAN

TRASH PAD & CLUSTER MAILBOX PLACEMENT DETAIL

NOT TO SCALE

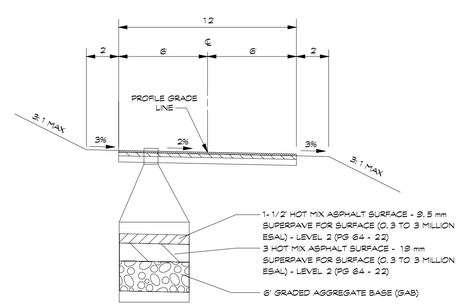

12' PAVED USE-IN-COMMON DRIVEWAY TYPICAL SECTION SUPER RIGHT

THERE ARE NO WELLS OR SEPTIC AREA WITHIN 100 FEET OF THE PROPERTY UNLESS OTHERWISE SHOWN HEREON.

Javier Morales Roldan — DATE
Professional Land Surveyor No. 21885
License Expires on August 9, 2027

PERC TESTS SHOWN HEREON HAVE BEEN FIELD LOCATED BY CARROLL LAND SERVICES, INC.

Javier Morales Roldan — DATE
Professional Land Surveyor No. 21885
License Expires on August 9, 2027

THE SAID PERC TESTS WERE OBSERVED BY _____ OF THE CARROLL COUNTY HEALTH DEPARTMENT AND THE RESULTS OF THE SAME ARE SHOWN HEREON.

CONCEPT PLAN

FOWLERS ENCLAVE

PROPERTY ID: 6029728 • HAMPSTEAD, MD 21074
TAX MAP 32 • BLOCK 4 • PARCEL 402
6th ELECTION DISTRICT • CARROLL COUNTY, MD

NOT FOR CONSTRUCTION

STATE OF MARYLAND — BRETT M. HACKETT — No. 56874 — PROFESSIONAL ENGINEER

08/24/2026
Brett M. Hackett, P.E.

Engineers • Surveyors
CLSI
Land Planning & Environmental Consultants
www.clsi-civileng.com
439 East Main Street Westminster, MD 21157-5539
(410) 848-1790 FAX (410) 848-1791

PROFESSIONAL CERTIFICATION: I HEREBY CERTIFY THAT THIS DOCUMENT WAS PREPARED OR APPROVED BY ME, AND THAT I AM A DULY LICENSED PROFESSIONAL ENGINEER UNDER THE LAWS OF THE STATE OF MARYLAND. LICENSE NO. 56874, EXPIRATION DATE DECEMBER 8, 2027

Date	Revisions		
		Drawn By:	KH, BMM
		Design By:	KH
		Reviewed By:	BH
		Date:	JULY, 2026
		Scale:	1"=50'
		Job No.:	2026037
		Sheet:	0100

CAD Drawing File Name: G:\2026\2026037-CONCEPT\SHEET\0100-TTL-P-26-0065.dwg

County File No.: P-26-0065